Scheda Dati

020PFSGV
Bouton-poussoir coup de poing Ø 38, vert, soufflet caoutchouc

Caratteristiche

Portée	Boutons-poussoirs coup de poing non-lumineux Ø 22
Componente	Bouton coup de poing Ø 38 avec soufflet
Code	020PFSGV
Désignation des marchandises	Bouton-poussoir coup de poing Ø 38, vert, soufflet caoutchouc
Couleur	Verde
Peso	29,0
Tariffa doganale	85365080
GTIN	8052878006259

Dati tecnici

Approvals	CE, UL, CSA
Compliance with standards	IEC-EN60947-1, IEC-EN60947-5-1, UL508, CSA C22-2
Operating temperatures	-40° ÷ +70°C
Environmental operating values	+25°C-97%RH / +45°C-93%RH (IEC-EN60068-2-30)
Protection degree	IP67 - IP69 (IEC-EN60529)
Protection against impact	IK04 (IEC-EN62262)
Mechanical durability	3.000.000 Operations
Shock resistance	30g duration=18ms (EN-IEC 60068-2-27)
Shock resistance	50g duration=11ms (EN-IEC 60068-2-27)
Vibration resistance	5g f= 2...500Hz (EN-IEC 60068-2-6)
Contact blocks configuration	Max no. 8 blocks (4+4)
Material	PA Polyamide
Cap or bellow material	Silicon rubber
Button/mushroom material (illuminated type)	PC Polycarbonate
Locking ring material	Zamak zinc alloy
Fixing diameter	22.5mm - Thickness 1÷6mm
Tightening torque	2 ÷ 3Nm (17.7 ÷ 26.6 Lb-in)
Actuation type	Spring return
Protection against electric shock	Class II (IEC-EN61140)
Illuminated version	Use Ba9S bulbs with 24mm height max.

Warranty period	18 months
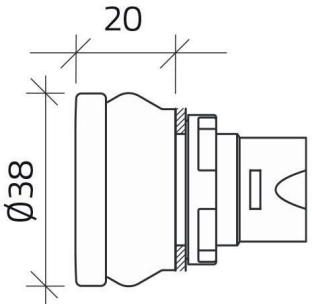
Disegni tecnici