Scheda Dati

020PICGN
Pulsador con guarda, negro, capuchón caucho

Caratteristiche

Rango	Pulsadores no luminosos Ø 22
Componente	Pulsadores con guarda con capuchón
Código	020PICGN
Descripción	Pulsador con guarda, negro, capuchón caucho
Color	Nero
Peso	25,35
Tariffa doganale	85365080
GTIN	8052878006518

Dati tecnici

Approvals	CE, UL, CSA
Compliance with standards	IEC-EN60947-1, IEC-EN60947-5-1, UL508, CSA C22-2
Operating temperatures	-40° ÷ +70°C
Environmental operating values	+25°C-97%RH / +45°C-93%RH (IEC-EN60068-2-30)
Protection degree	IP67 - IP69 (IEC-EN60529)
Protection against impact	IK04 (IEC-EN62262)
Mechanical durability	3.000.000 Operations
Shock resistance	30g duration=18ms (EN-IEC 60068-2-27)
Shock resistance	50g duration=11ms (EN-IEC 60068-2-27)
Vibration resistance	5g f= 2...500Hz (EN-IEC 60068-2-6)
Contact blocks configuration	Max no. 8 blocks (4+4)
Material	PA Polyamide
Cap or bellow material	Silicon rubber
Button/mushroom material (illuminated type)	PC Polycarbonate
Locking ring material	Zamak zinc alloy
Fixing diameter	22.5mm - Thickness 1÷6mm
Tightening torque	2 ÷ 3Nm (17.7 ÷ 26.6 Lb-in)
Actuation type	Spring return
Protection against electric shock	Class II (IEC-EN61140)
Illuminated version	Use Ba9S bulbs with 24mm height max.
Warranty period	18 months
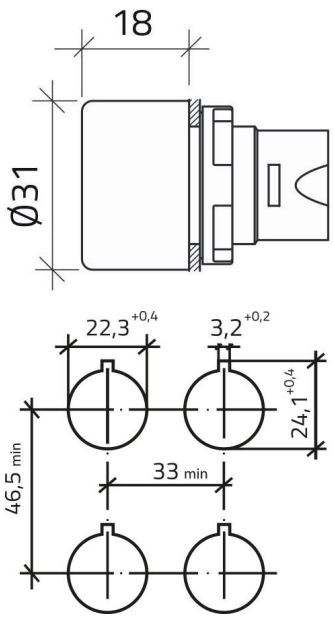
Disegni tecnici