Datablad

020STAMENW
Keuzeknop, zwart, 3 posities, Cam E, metaal





Kenmerken

Bereik	Niet-verlichte keuzeschakelaars Ø 22 ■ metalen ringmoer
Component	3-positie keuzeknoppen
Rubriek	020STAMENW
Omschrijving	Keuzeknop, zwart, 3 posities, Cam E, metaal
Kleur	Nero
Gewicht	38,0
Douanetarief	85365080
GTIN	8052878023652

Technische gegevens

Approvals	CE
Compliance with standards	IEC-EN60947-1, IEC-EN60947-5-1, UL508, CSA C22-2
Compliance with standards	UNI CEI EN 45545-2
Operating temperatures	-25° ÷ +65°C
Environmental operating values	+25°C-97%RH / +45°C-93%RH (IEC-EN60068-2-30)
Protection degree	IP65 (IEC-EN60529)
Protection against impact	IK03 (IEC-EN62262)
Mechanical durability	1.000.000 Operations
Shock resistance	30g duration=18ms (EN-IEC 60068-2-27)
Shock resistance	50g duration=11ms (EN-IEC 60068-2-27)
Vibration resistance	5g f= 2...500Hz (EN-IEC 60068-2-6)
Contact blocks configuration	Max no. 4 blocks (2+2)
Knob or lever material	PC Polycarbonate
External bezel material	Chromed zinc alloy
Locking ring material	Zamak zinc alloy
Fixing diameter	22.5mm - Thickness 1÷6mm
Tightening torque	2 ÷ 3Nm (17.7 ÷ 26.6 Lb-in)
Protection against electric shock	Class II (IEC-EN61140)
Warranty period	18 months

Technische tekeningen

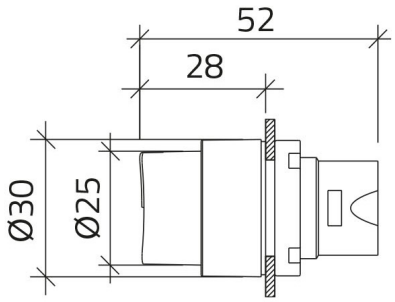

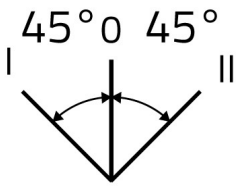

CAM E

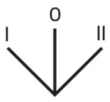

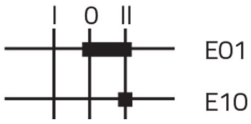

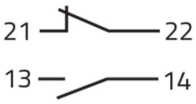



020E01
020E10
020G

