Scheda Dati

020STAMLARW
Selettore luminoso a manopola, rosso, 2 posizioni, Cam A, metallo





Caratteristiche

Gamma	Selettori a manopola luminosi Ø 22 - ghiera in metallo
Componente	2 posizioni
Codice	020STAMLARW
Descrizione	Selettore luminoso a manopola, rosso, 2 posizioni, Cam A,
Colore	Rosso
Peso	38,0
Tariffa doganale	85365080
GTIN	8052878023973

Dati tecnici

Approvals	CE
Compliance with standards	IEC-EN60947-1, IEC-EN60947-5-1, UL508, CSA C22-2
Compliance with standards	UNI CEI EN 45545-2
Operating temperatures	-25° ÷ +65°C
Environmental operating values	+25°C-97%RH / +45°C-93%RH (IEC-EN60068-2-30)
Protection degree	IP65 (IEC-EN60529)
Protection against impact	IK03 (IEC-EN62262)
Mechanical durability	1.000.000 Operations
Shock resistance	30g duration=18ms (EN-IEC 60068-2-27)
Shock resistance	50g duration=11ms (EN-IEC 60068-2-27)
Vibration resistance	5g f= 2...500Hz (EN-IEC 60068-2-6)
Contact blocks configuration	Max no. 2 blocks (1+1)
Knob or lever material	PC Polycarbonate
External bezel material	Chromed zinc alloy
Locking ring material	Zamak zinc alloy
Fixing diameter	22.5mm - Thickness 1÷6mm
Tightening torque	2 ÷ 3Nm (17.7 ÷ 26.6 Lb-in)
Illuminated selector switch (all versions)	It is mandatory to use LED bulbs type 010BA9SLxxx
Protection against electric shock	Class II (IEC-EN61140)
Warranty period	18 months

Disegni tecnici

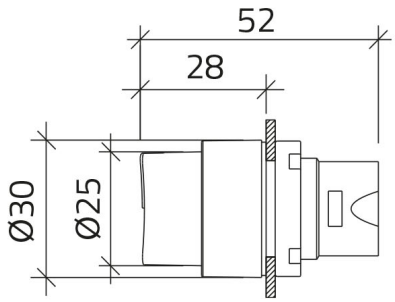

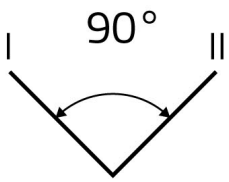

CAM A



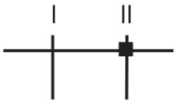





020E10
020G

CAM A



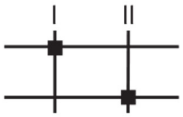

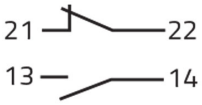



020E01
020E10
020G

