Datasheet

030PFGEV
Push-button with extended guard, flush-mount, momentary, green

Features

Range	Non-illuminated push-buttons Ø 30
components	With extended guard
Code	030PFGEV
Description	Push-button with extended guard, flush-mount, momentary, green
Colour	Verde
Weight - gr	36.0
Customs Tariff	85365080
GTIN	8052878030384

Datasheet

Approvals	CE, UL, CSA
Compliance with standards	IEC-EN60947-1, IEC-EN60947-5-1, UL508, CSA C22-2
Compliance with standards	UNI CEI EN 45545-2, CEI EN 61373
Operating temperatures	-25° ÷ +65°C
Environmental operating values	+25°C-97%RH / +45°C-93%RH (IEC-EN60068-2-30)
Protection degree	IP65 (IEC-EN60529)
Protection against impact	IK04 (IEC-EN62262)
Mechanical durability	3.000.000 Operations
Shock resistance	30g duration=18ms (EN-IEC 60068-2-27)
Shock resistance	50g duration=11ms (EN-IEC 60068-2-27)
Vibration resistance	5g f= 2...500Hz (EN-IEC 60068-2-6)
Contact blocks configuration	Max no. 6 blocks (3+3)
Button/mushroom material (illuminated type)	PC Polycarbonate
Button or knob material	PA Polyamide
External bezel material	Anodized aluminum
Locking ring material	Zamak zinc alloy
Fixing diameter	30.5mm - Thickness 1÷6mm
Tightening torque	2 ÷ 3Nm (17.7 ÷ 26.6 Lb-in)
Actuation type	Spring return
Protection against electric shock	Class I (IEC-EN61140)

Warranty period	18 months
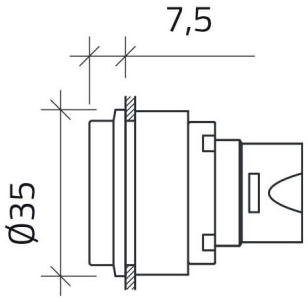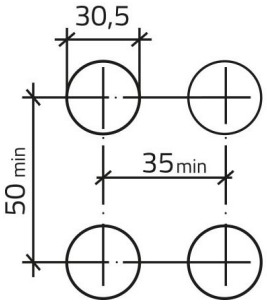
Technical drawings