Datasheet

080F0808-GFFA

Wall-mounting emergency stop push-button 84x84, mushroom push-button Ø 60, twist release, red

Features

Range	Emergency stop push-button enclosure 84x84 mm
components	Emergency push-button Ø 60, twist release, wall-mounting
Code	080F0808-GFFA
Description	Wall-mounting emergency stop push-button 84x84, mushroom push-button Ø 60, twist release, red
Colour	Rosso
Weight - gr	85.0
Customs Tariff	85371098
GTIN	8052878065096

Datasheet

Approvals	CE
Compliance with standards	IEC-EN62208
Operating temperatures	-35° ÷ +80°C
Protection degree	IP66 - IP69 (IEC-EN60529)
Protection against impact	IK07 (IEC-EN62262)
Enclosure material	PA Polyamide
Gasket material	TPE thermoplastic elastomer
Screw material	Stainless steel AISI 304
Tightening torque	0.8 ÷ 1.2Nm (7.1÷10.6 Lb-in)
Protection against electric shock	Class II (IEC-EN61140)
Heavy metal-free	yes
PVC-free	yes
Silicon-free	yes
Halogen-free	yes
Combustion behaviour	HB (UL94)
Combustion behaviour	650°(IEC-EN60695-2-11)
Fitted for outdoor application	yes
Warranty period	18 months
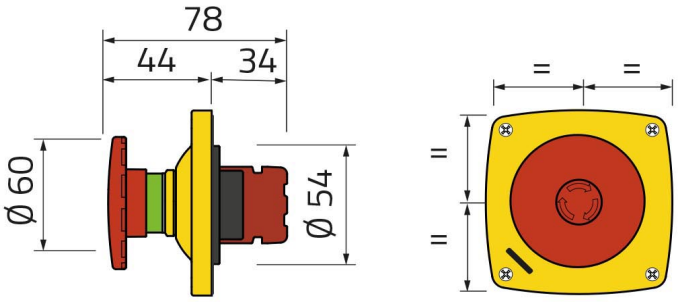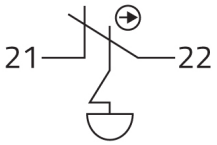
Technical drawings