Scheda Dati

080R140-GP3
Pulsantiera pensile remota 3 fori, giallo

Caratteristiche

Gamma	Pulsantiere pensili remote 140x83mm
Componente	Con 3 fori Ø 22
Codice	080R140-GP3
Descrizione	Pulsantiera pensile remota 3 fori, giallo
Colore	Giallo RAL1003 / Grigio RAL7035
Peso	206,0
Tariffa doganale	85381000
GTIN	8052878066154

Dati tecnici

Approvals	CE
Compliance with standards	IEC-ENC60947-1, IEC-EN60947-5-1, IEC-EN60204-1
Operating temperatures	-35° ÷ +80°C
Protection degree	IP66 - IP69 (IEC-EN60529)
Protection against impact	IK08 (IEC-EN62262)
Housing material	High impact grade thermoplastic polymer
Manufacturing process	Injection moulding
Gasket material	TPE thermoplastic elastomer
Screw material	Stainless steel AISI 304
Screw type	Torx T15 slotted head type
Tightening torque	0.8 ÷ 1.2Nm (7.1÷10.6 Lb-in)
Cable clamp screw	Tightening torque 1.5Nm (13.3 Lb-in) max.
Pendant fixing ring	Stainless steel AISI 304
Flexible cable gland	M16x1.5 suitable for cable D.5÷10mm
Rated insulation voltage	Ui 300V - Uimp 2.5KV (IEC-EN60947-1)
Protection against electric shock	Class II (IEC-EN61140)
Combustion behaviour	HB (UL94)
Combustion behaviour	650°(IEC-EN60695-2-11)
Fitted for outdoor application	yes
Pushbutton and electrical contacts block	See 020 product range: 020 SM2 D.22mm
Warranty period	18 months
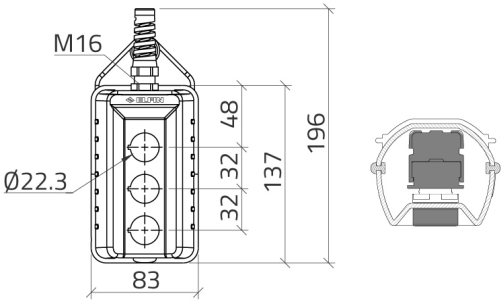
Disegni tecnici